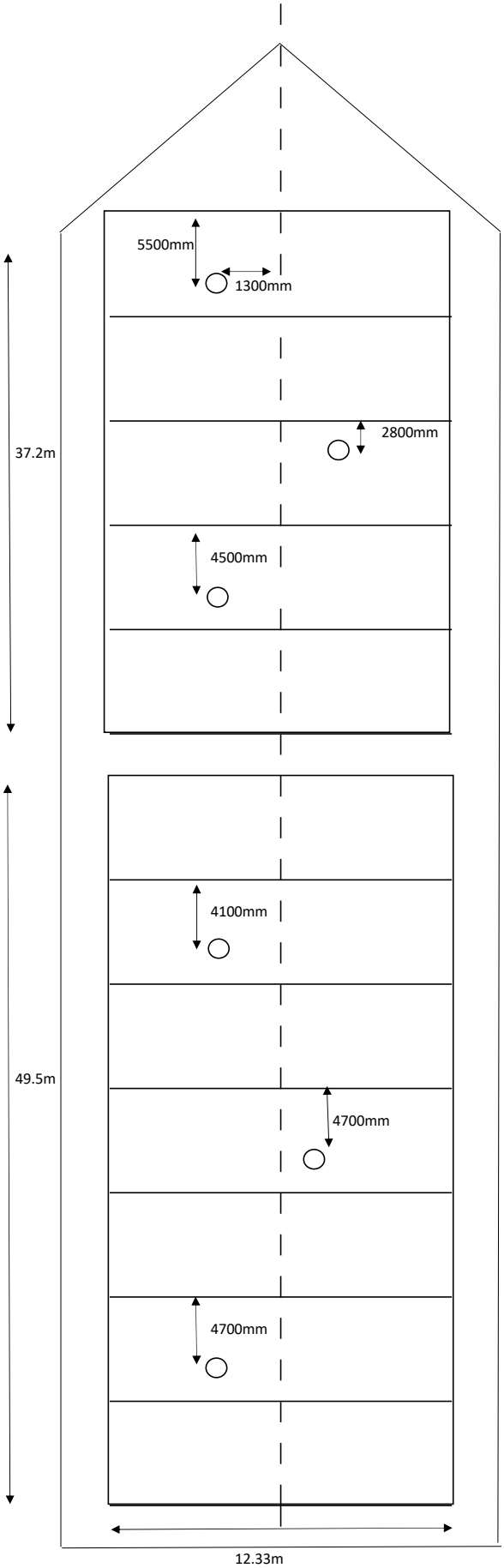

A Class

Distance from centre line of vessel to centre of the cement hole for panels 3,4,7,9,11 are as per panel 1
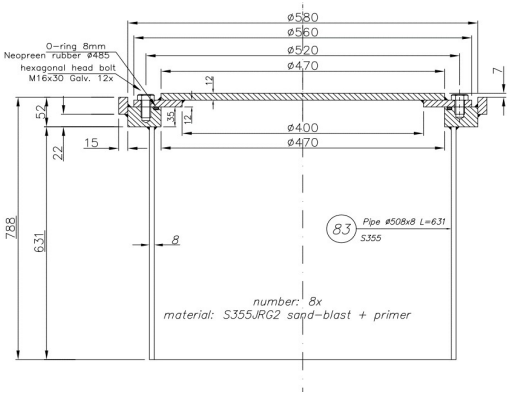
Loading Hole Dimensions